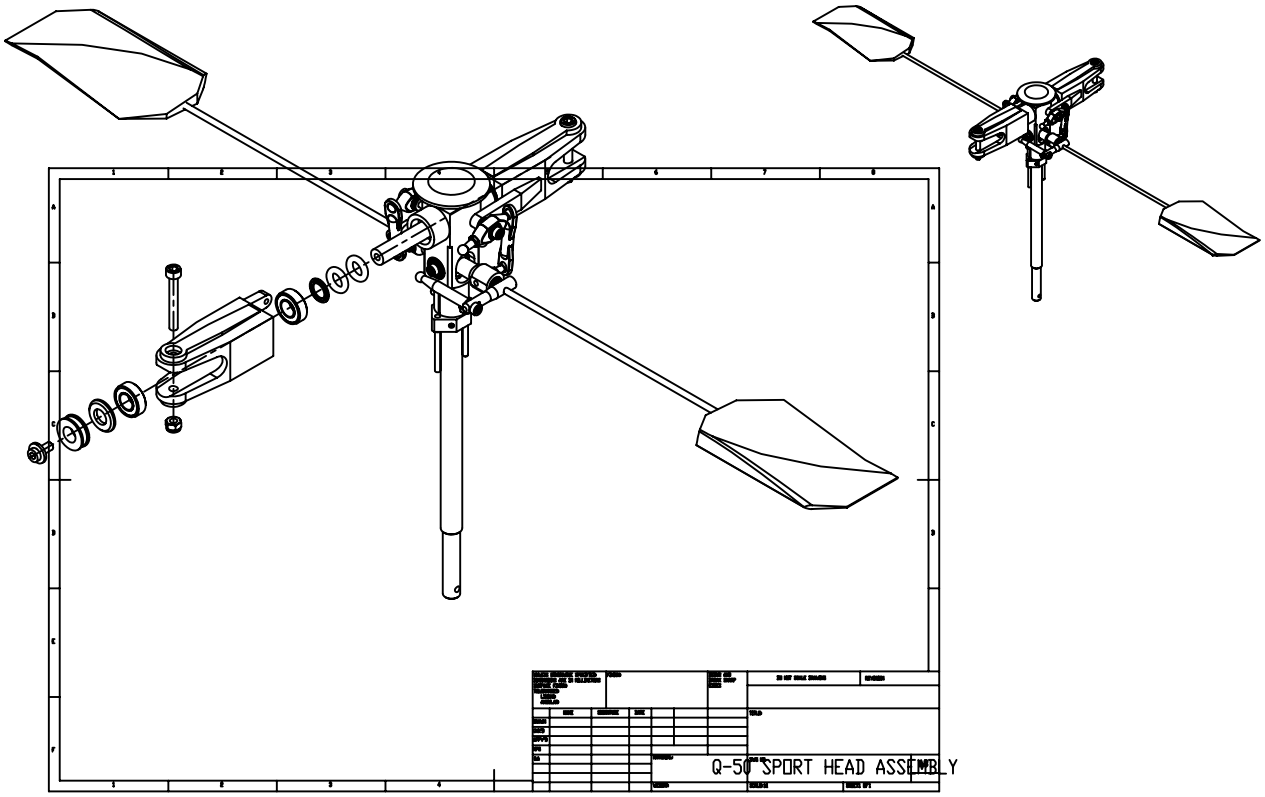

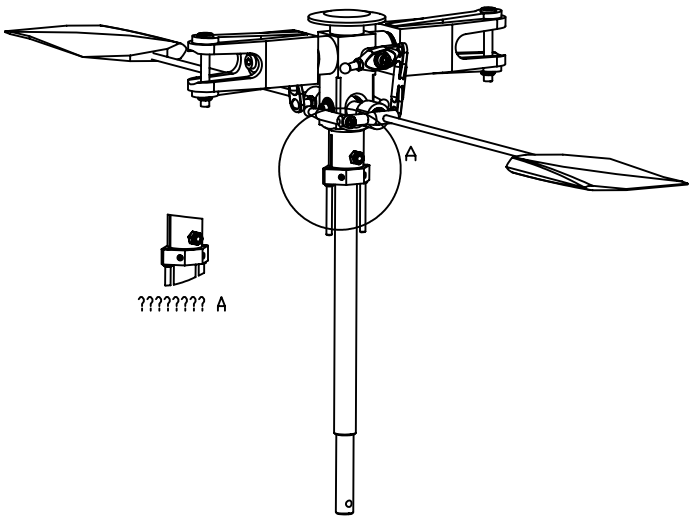

Fri Jan 28 16:50:17 2005